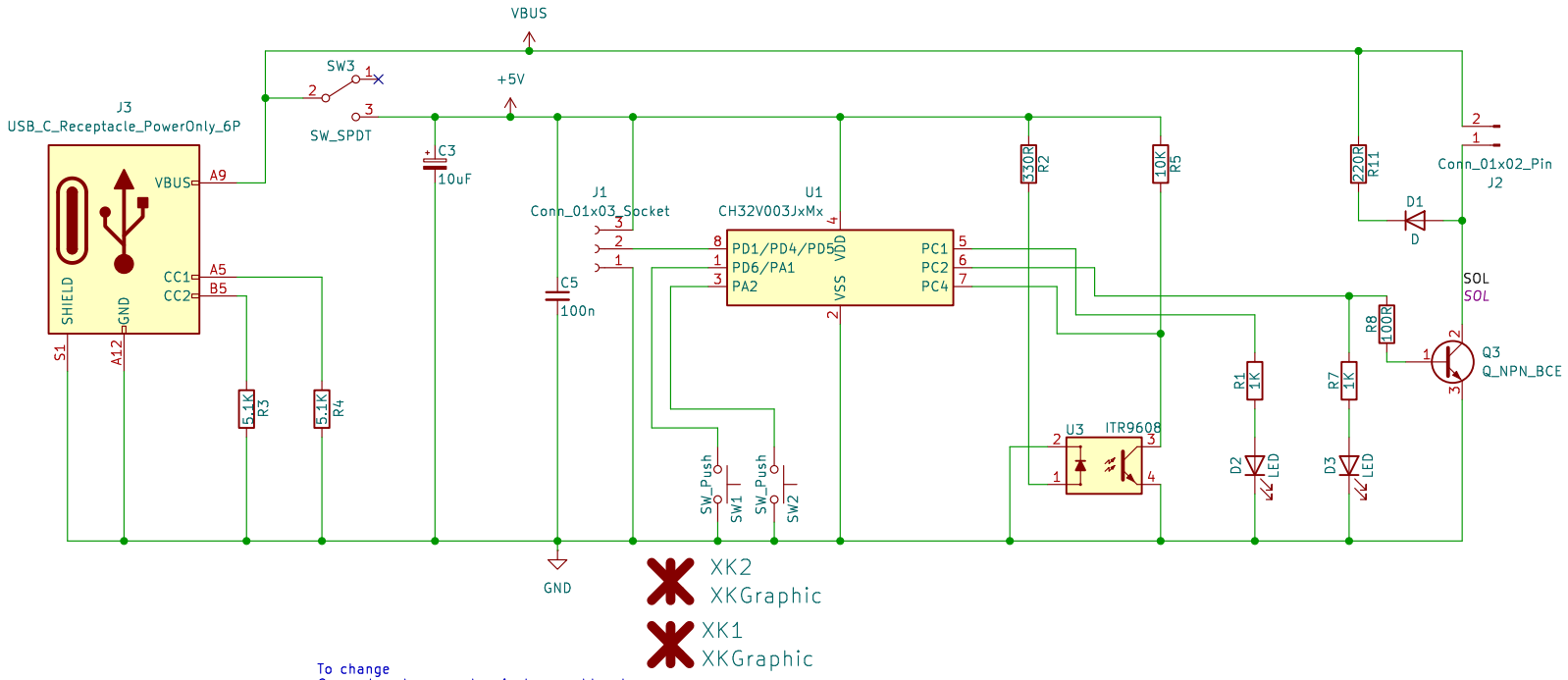

To change
Connectors to screw terminals or soldered.
PCB piston arm
Q3 to Mosfet ?
6V ??

Solenoid Engine V3
Single, Standalone.

Sheet: /
File: solengv3.kicad_sch

Title: SolEngV3

Size: A4	Date:	**Rev:** V2
KiCad E.D.A. 9.0.9		Id: 1/1